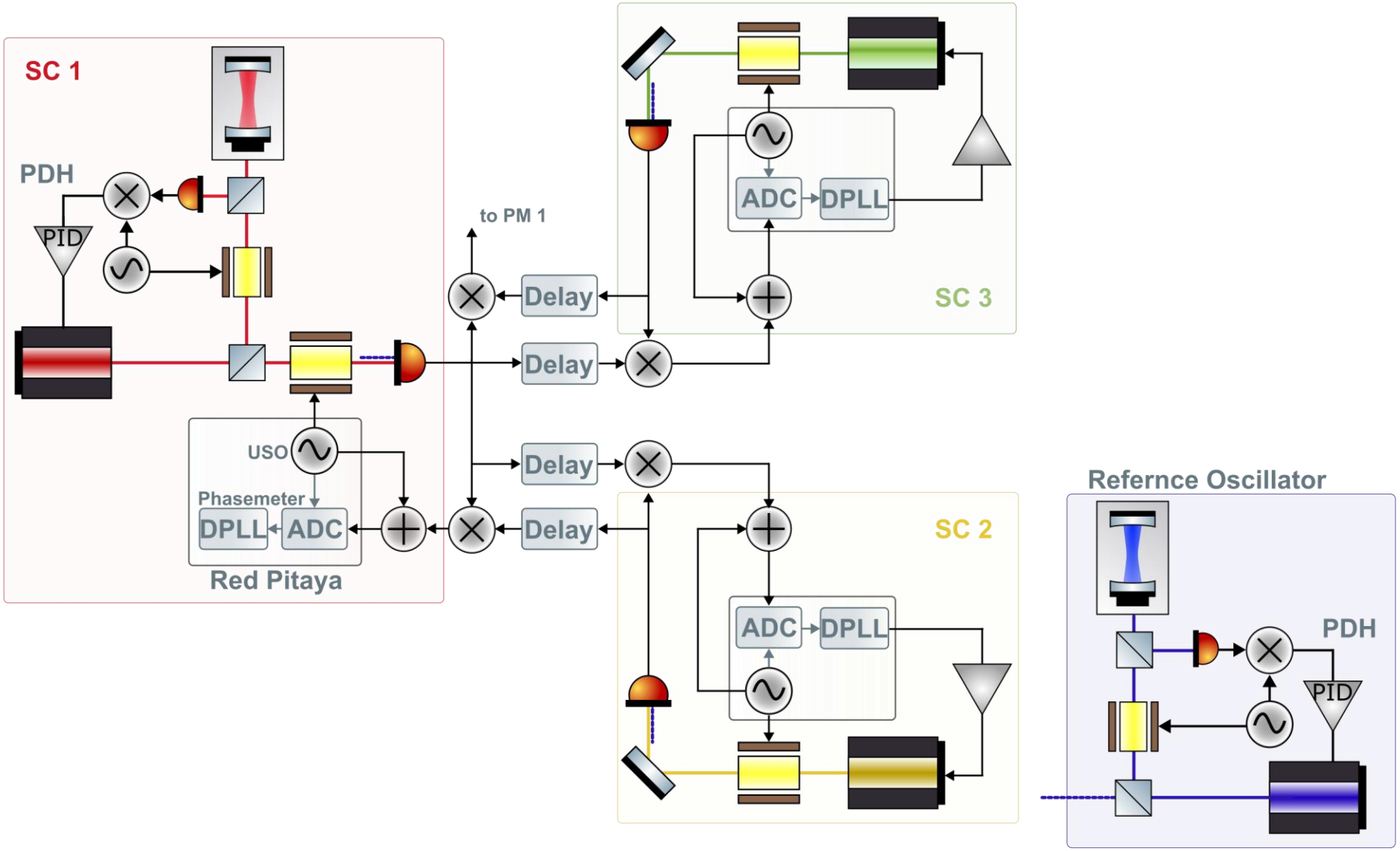
SC 1
PDH
PID
USO
Phasemeter
DPLL
ADC
Red Pitaya
to PM 1
Delay
Delay
Delay
Delay
ADC
DPLL
SC 3
ADC
DPLL
SC 2
Refernce Oscillator
PDH
PID

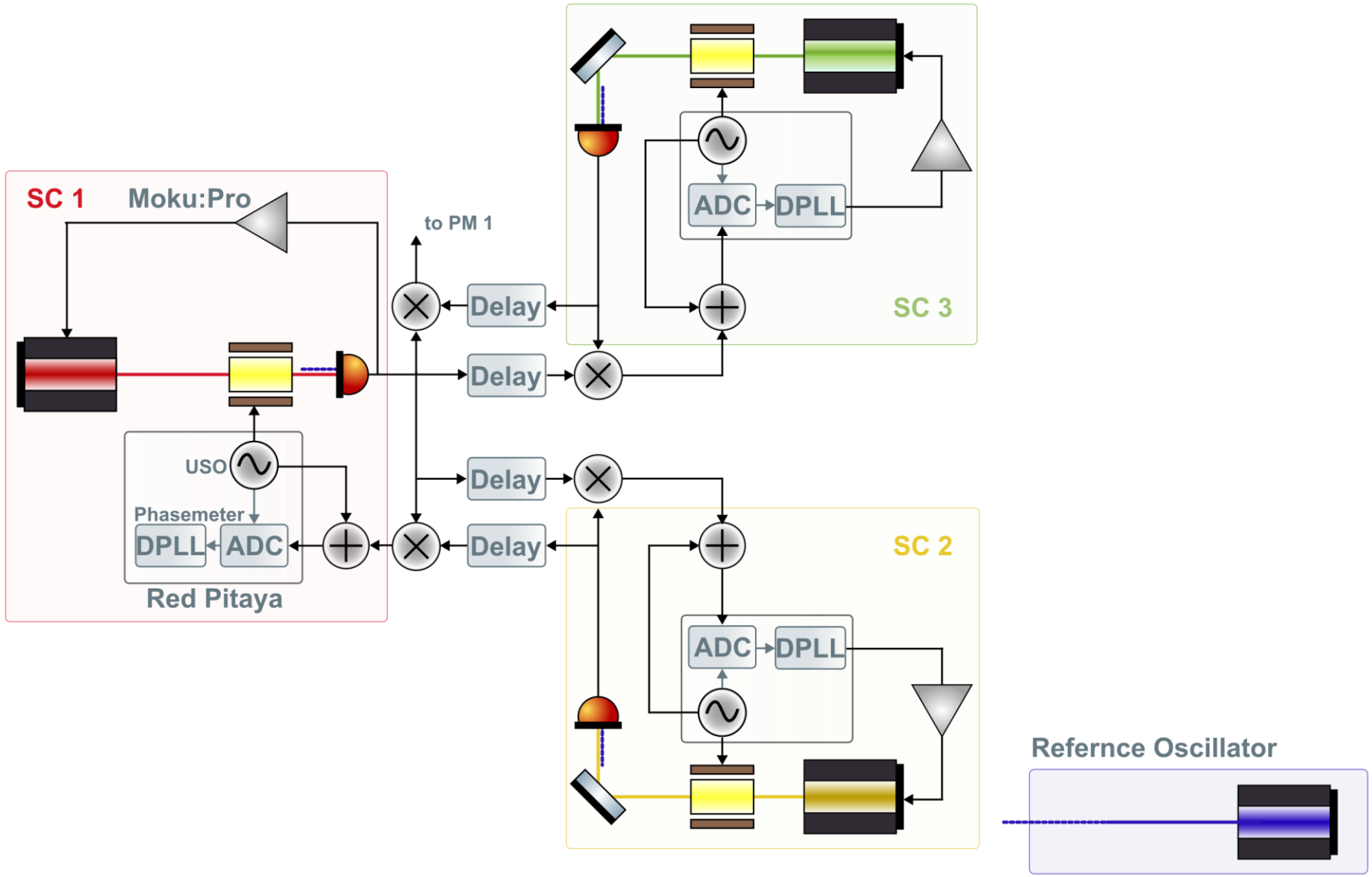
SC 1
Moku:Pro
to PM 1
Delay
Delay
Delay
Delay
USO
Phasemeter
DPLL
ADC
Red Pitaya
ADC
DPLL
SC 3
SC 2
ADC
DPLL
Refernce Oscillator

Laser Quotes

Manufacturer	Price of one (EUR)	Min Power (mW)	Max Power (mW)	Thermal Tuning Range (GHz)	PZT Tuning Range (MHz)	Frequency Drift	Notes
VM Photonics	24900	250	250	6	200		great customer support
Coherent	29242	300	500	30	130	~1 MHz/min	tested and proven
Lumentum	-	100	100	30	30	~50 MHz/hr	DIY power supply

Room Layout
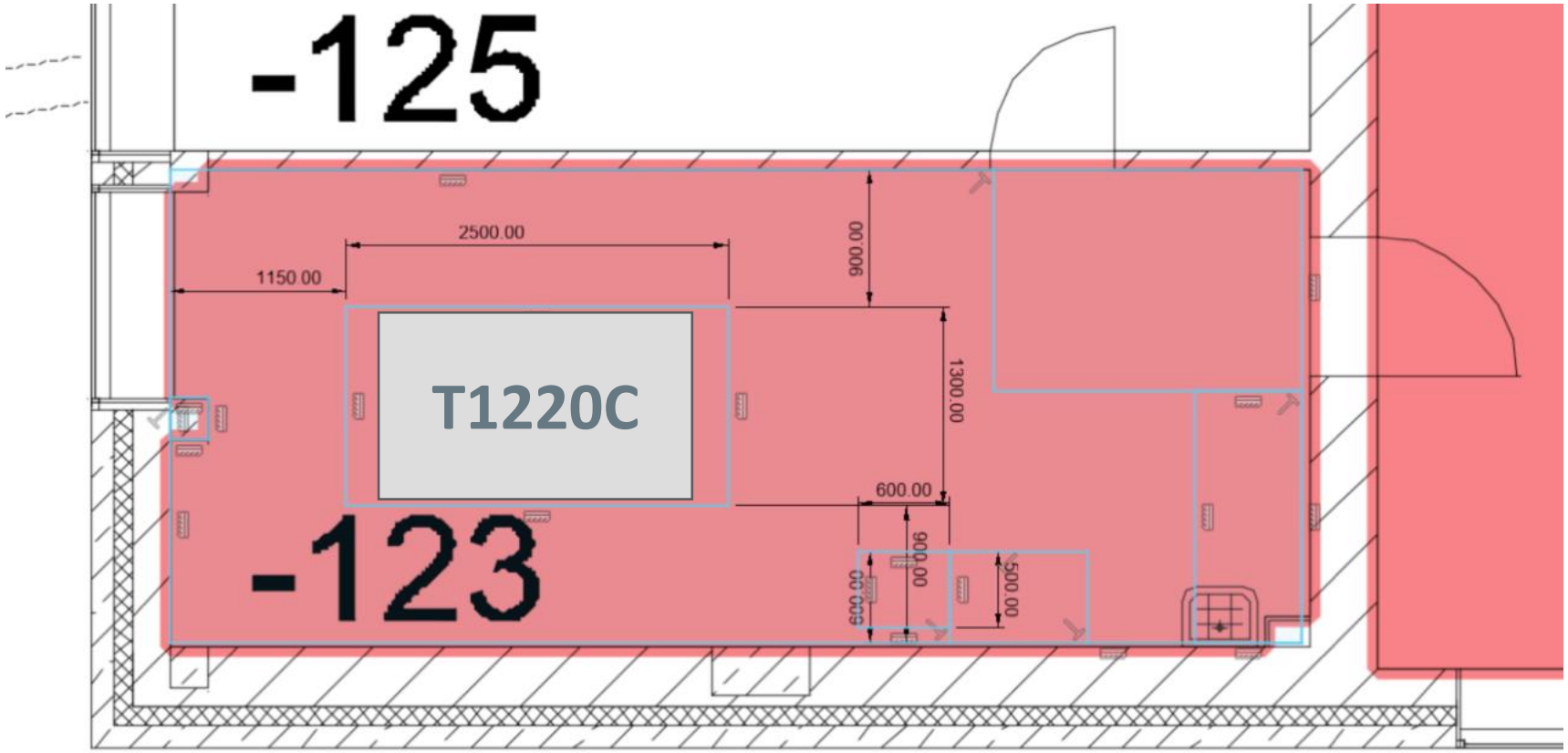
- T1220C – Thorlabs Nexus Optical Table, 1.2 m x 2 m x 210 mm (4152 EUR)
- PTS603 - Thorlabs Active Legs, 700 mm (3356 EUR)
- Where should the vacuum tank go?